ChargerPro™ *Series*

Thoroughbred - 1.25" Series

Light Commercial Water Filtering Systems

Installation Instructions and Owners Manual

Congratulations on the purchase of your new water conditioner featuring the Thoroughbred control system. Enjoy lasting peace of mind, knowing your system is built to deliver years of reliable, filtered water.



CHARGER
Water Treatment Products

Delivering Cleaner, Healthier Water Across America

www.chargerwater.com

Table of Contents

Installation Information: Your Water Test 1
Pre-Installation Instructions 2
Installation 3-4
Bypass Valve Operation 5
Start Up Instructions 6
Front Cover and Drive Assembly 7
Valve Body Piston Seal Parts Diagram and Injector Parts 8
Installer Display Settings 9
User Display Settings 10-11
Spec Sheet 12
Notes 13-14
Product Warranty 15

ORIGINAL INSTALLATION INFORMATION

Water Treatment Professional: _____ Phone: _____

Installation Date: _____/_____/_____

Install location: _____

Model No: _____

Serial No: _____

Water Source: City Well Other

Mineral Tank Size: Diameter _____ Height _____

Time of Regeneration: _____ AM PM

DLFC: _____ GPM

Your Thoroughbred Water Filtering System is a precision built, high quality product. This unit will deliver filtered water, for many years, when installed and operated properly. Please study this manual carefully. This manual should be kept for future reference.

If you have questions regarding your water conditioner, contact your local Water Treatment Professional or Charger Water Treatment Products at 8150 N. Lehigh Ave, Morton Grove, IL 60053 • www.chargerwater.com

Pre-Installation Instructions

The manufacturer has preset the water treatment unit's sequence of cycles, including all cycle times.
The dealer should read this page and guide the installer regarding day override and time of regeneration, before installation.

For the installer, the following must be used:

- Program Installer Settings: Day Override (preset to 14 days), and Time of Regeneration
- (preset to 12 AM)
- Read Normal Operating Displays
- Set Time of Day
- Read Power Loss & Error Display

For the homeowner, please read operating displays and instructions.

Water Filtering:

During operation, the normal user display is time of day or volume remaining (if metered). Other displays are available and can be viewed by pressing the NEXT button to scroll through them. When stepping through any programming, if no buttons are pressed within 5 minutes, the display returns to a normal user display. Any changes made prior to the 5-minute time out are incorporated.

To quickly exit any programming, installer settings, etc., press the CLOCK button. Any changes made prior to the exit are incorporated. If desired, two regenerations within 24 hours are possible with a return to the preset program. To do a double regeneration:

1. Press the REGEN button once. "REGEN TODAY" will flash on the display.

2. Press and hold the REGEN button for three seconds until the regeneration begins.

Once the control valve has completed the immediate regeneration, it will do another one at the next scheduled regeneration time.



Installation

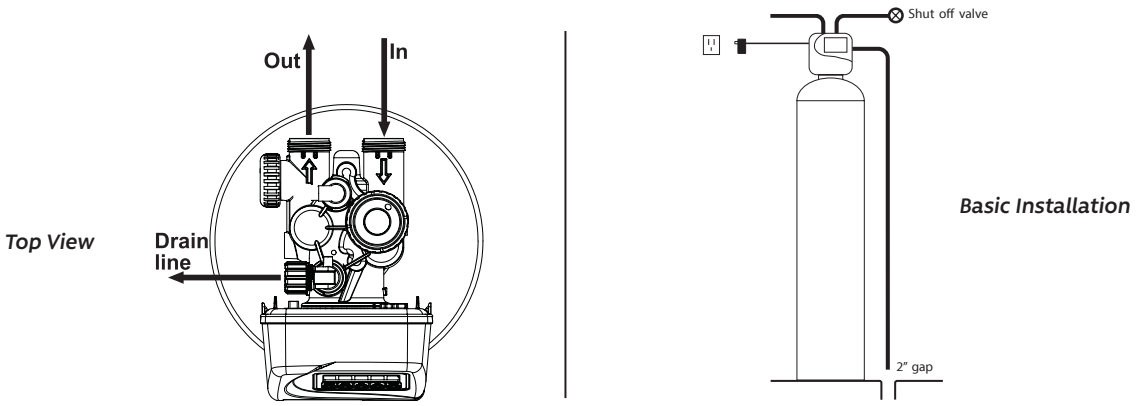

GENERAL INSTALLATION & SERVICE WARNINGS

The control valve, fittings, and/or bypass are designed to accommodate minor plumbing misalignments but are not designed to support the weight of a system or the plumbing.

Do not use Vaseline, oils, other hydrocarbon lubricants or spray silicone anywhere. A silicone lubricant may be used on black o-rings, but is not necessary.

Do not use pipe dope or other sealants. Only use Teflon tape on threaded connections. The nuts and caps are designed to be unscrewed or tightened by hand or with the special plastic service wrench, V3193-02. If necessary, a pliers can be used to unscrew the nut or cap. Do not use a pipe wrench to tighten or loosen nuts or caps. Do not place screwdriver in slots on caps and/or tap with a hammer.

SITE REQUIREMENTS:

- Water pressure, 40-90 psi
- Water temperature, 40°-100°F
- The tanks should be on a firm, level surface
- Current draw is 0.25 amperes
- A 15-foot power cord is furnished
- The plug-in transformer is for dry locations only
- Electrical: Use a 115/120v, 60Hz uninterrupted outlet

1. The distance between the drain and the water filter should be as short as possible. All plumbing should be done in accordance with local plumbing codes.
2. Do not install any water filter, with less than 10 feet of piping, between its outlet and the inlet of a water heater. Protect system from vacuum, reverse flow, and negative pressure.
3. Do not locate unit where it or its connections (including the drain and overflow lines) will ever be subjected to room temperatures under 34°F.
4. **INLET/OUTLET PLUMBING:** Connect to a supply line downstream of outdoor spigots. Install an inlet shutoff valve and plumb to the unit's bypass valve inlet located at the right rear as you face the unit. There are a variety of installation fittings available. They are listed under Installation Fitting Assemblies. When assembling the installation fitting package (inlet and outlet), connect the fitting to the plumbing system first and then attach the nut, split ring, and o-ring. Heat from soldering or solvent cements may damage the nut, split ring, or o-ring. Solder joints should be cool and solvent cements should be set before installing the nut, split ring, and o-ring. Avoid getting solder flux, primer, and solvent cement on any part of the o-rings, split rings, bypass valve, or control valve. If the building's electrical system is grounded to the plumbing, install a copper grounding strap from the inlet to the outlet pipe. Plumbing must be done in accordance with all applicable local codes.

6. **DRAIN LINE:** First, be sure that the drain can handle the backwash rate of the system. Solder joints near the drain must be done prior to connecting the drain line flow control fitting. Leave at least 6" between the drain line flow control fitting and solder joints. Failure to do this could cause interior damage to the flow control. Install a 1/2" I.D. flexible plastic tube to the drain line assembly or the 5/8" O.D. nut assembly and use the 3/4" NPT fitting for larger drain lines. Where the drain line is elevated but empties into a drain below the level of the control valve, form a 7" loop at the discharge end of the line so that the bottom of the loop is level with the drain connection on the control valve. This will provide an adequate anti-siphon trap. Where the drain empties into an overhead sewer line, a sink-type trap must be used. Run drain tube to its discharge point in accordance with plumbing codes. Pay special attention to codes for air gaps and anti-siphon devices.

   IMPORTANT: Never insert a drain line directly into a drain, sewer line, or trap. Always allow an air gap between the drain line and the wastewater to prevent the possibility of sewage being back-siphoned into the filter.

7. **SERIAL NUMBER:** Record the serial number on the installer's and customer's records.

   Bypass Valve - The bypass valve is typically used to isolate the control valve from the plumbing system's water pressure in order to perform control valve repairs or maintenance.

Bypass Valve

The bypass valve is particularly unique in the water treatment industry due to its versatility and state-of-the-art design features. The 1" full flow bypass valve incorporates four positions including a diagnostic position that allows service personnel to work on a pressurized system while still providing untreated bypass water to the facility or residence. Its completely non-metallic, all plastic design allows for easy access and serviceability without the need for tools.

The bypass body and rotors are fiber reinforced composite and the nuts and caps are glass-filled polypropylene. All seals are self-lubricating EPDM to help prevent valve seizing after long periods of non-use.

The bypass consists of two interchangeable plug valves that are operated independently by red, arrow-shaped handles. The handles identify the flow direction of the water. The plug valves enable the bypass valve to operate in four positions. (See page 5)

1. **Normal Operation Position:** The inlet and outlet handles point in the direction of flow indicated by the engraved arrows on the control valve. Water flows through the control valve during normal operation and this position also allows the control valve to isolate the media bed during the regeneration cycle. (See Figure 1 on page 5)
2. **Bypass Position:** When the inlet and outlet handles point to the center of the bypass, the control valve is isolated from the water pressure contained in the plumbing system. Untreated water is supplied to the plumbing system. (See Figure 2 on page 5)
3. **Diagnostic Position:** The inlet handle points in the direction of flow and the outlet handle points to the center of bypass valve, system water pressure is allowed to the control valve and the plumbing system while not allowing water to exit from the control valve to the plumbing. (See Figure 3 on page 5)
4. **Shut Off Position:** When the inlet handle points to the center of the bypass valve and the outlet handle points in the direction of flow, the water is shut off to the plumbing system. If water is available on the outlet side of the filter, it is an indication of water bypass around the system (i.e. a plumbing connection somewhere in the building bypasses the system). (See Figure 4 on page 5)

Bypass Valve Operation

NORMAL OPERATION

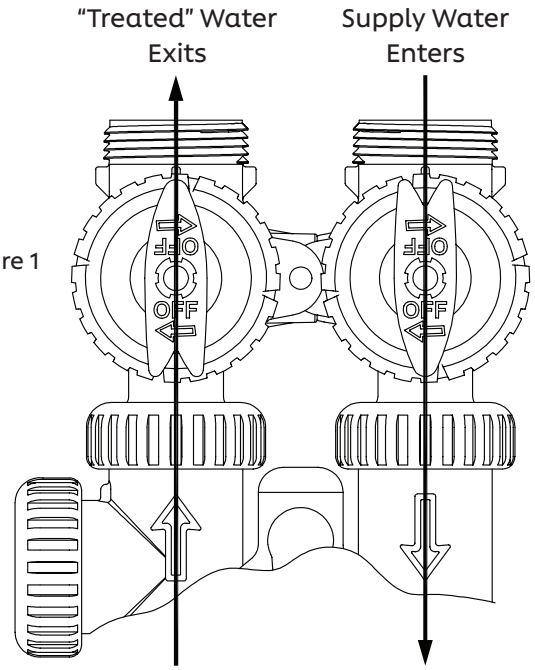

Figure 1

BYPASS OPERATION

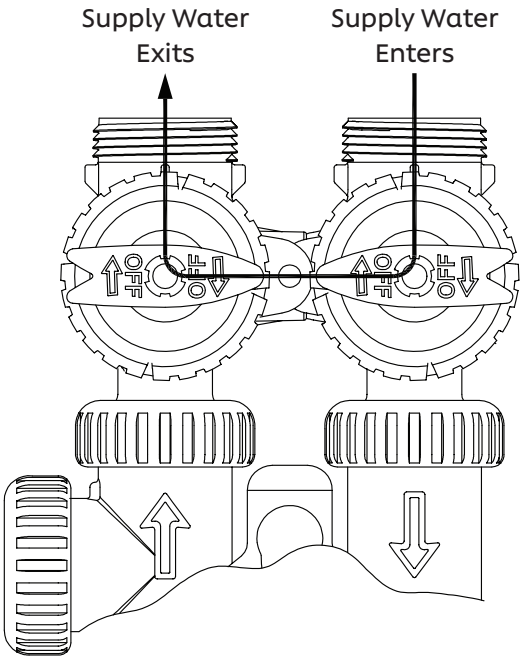

Figure 2

DIAGNOSTIC MODE

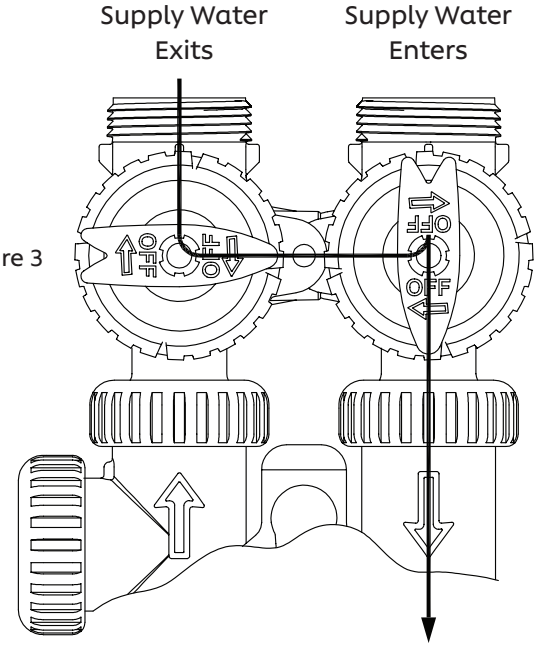

Figure 3

SHUT OFF MODE

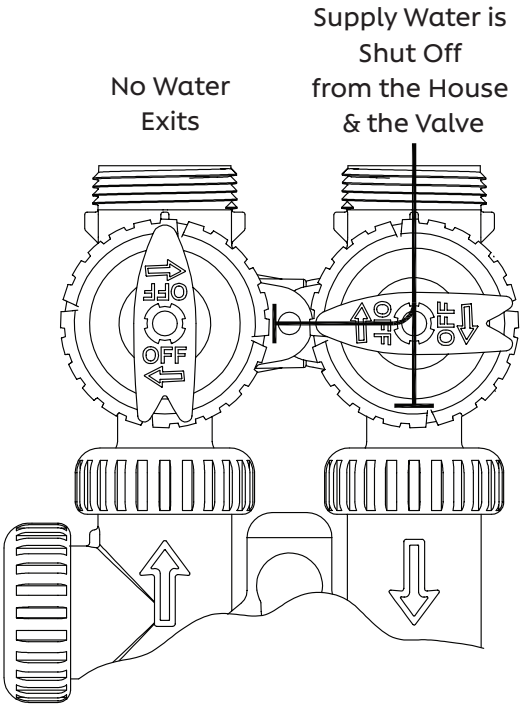

Figure 4

Start Up Instructions

A. After installation is completed and checked for leaks, rotate the bypass handles to the bypass position. (See Bypass Valve Diagram on page 5.)

B. Fully open a cold water faucet.

C. Allow water to run until clear to rid pipes of debris, which may have occurred during installation.

D. The system is now ready for testing:

1. With the bypass valve in the bypass position.
2. Press and hold the UP and DOWN buttons for about three seconds until the drive motor starts. Wait until the motor stops and the display reads "BACKWASH." The backwash time will begin to count down.
3. Open the inlet handle of the bypass valve, very slightly, allowing water to fill the tank slowly in order to expel air. CAUTION: If water flows too rapidly, there will be a loss of media out of the drain.
4. When the water is flowing steadily to the drain without the presence of air, press the UP button to advance the control to the rinse position.

E. Fully open the inlet bypass valve handle (bypass is now in the Diagnostic Position - see page 5 for illustration). There should be a slow flow to the drain. Allow three minutes for the media bed to settle.

Well Water Installation

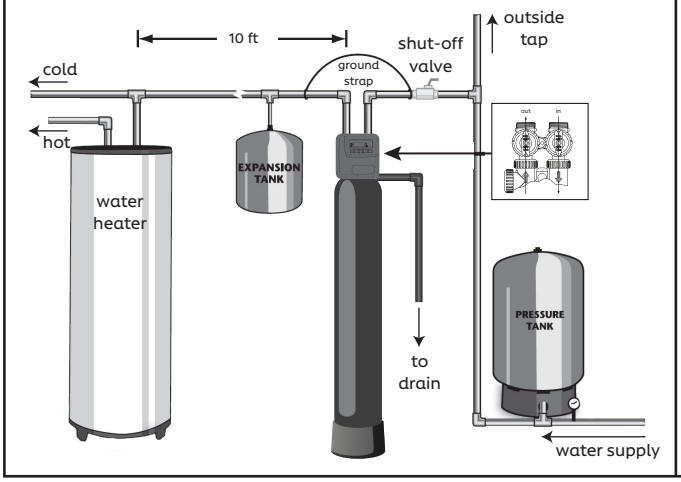

Municipal Installation

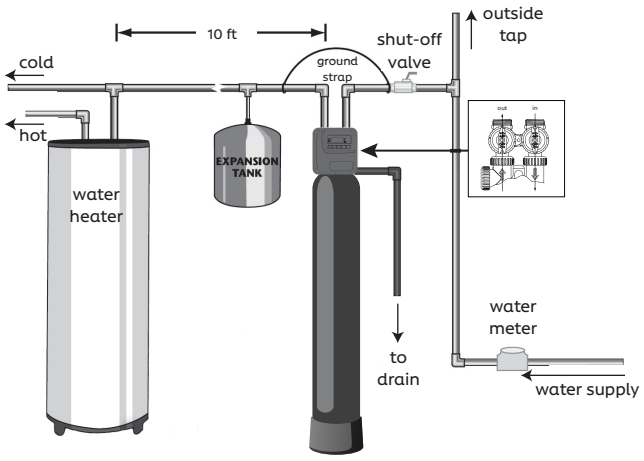

Typical Drain Line Installations

Floor Drain

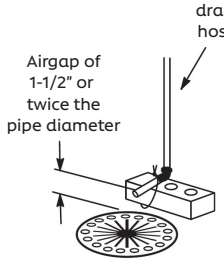

Standpipe

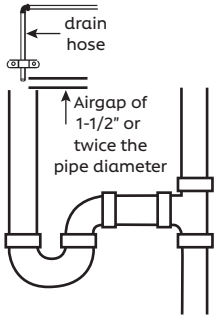

Laundry tub

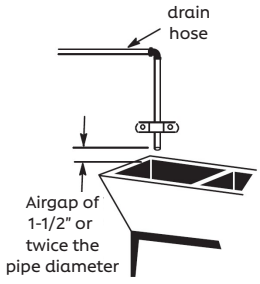

Front Cover and Drive Assembly

Drawing No.	Order No.	Description	Quantity
1	V3984-01	CD FRONT COVER ASSEMBLY	1
2	V3107-01	CD MOTOR ASY	1
3	V3002-A	CD DRIVE BRACKET ASY	1
4	V3985CD-04BOARD	CD THRU 2 CD4 PCB REPL	1
5	V3110	CD DRIVE REDUCING GEAR 12X36	3
6	V3109	CD DRIVE GEAR COVER	1
Not Shown	V3186-06	CD POWER SUPPLY US 15VDC HOCP	1
	V3946	CD WIDE DRIVE BACK PLATE	

Refer to Control Valve Service Manual for other drawings and part numbers.

Power Supply	U.S.
Supply Voltage	100-120 VAC
Supply Frequency	50/60 Hz
Output Voltage	15 VDC
Output Current	500 mA

Relay Driver Output Type – Three Solid-State 12VDC "wet" contacts - N.O. Relay Driver Output Capacity - 12VDC @100mA per relay output (Total current through all three outputs not to exceed 200mA) NOTE: Check for proper mounting dimensions on valve back plate prior to mounting an external relay under control cover.

Wiring for correct on/off operation	
PC Board Relay Terminal Block	Relay
RLY1/RLY2/RLY3	Coil -
V+	Coil+

Care must be taken when programming both MAVs and all three relay outputs to be active. If it will be possible for one motor and all three relay outputs to be energized at the same time during operation, the current rating of the supplied wall adapter may be exceeded.

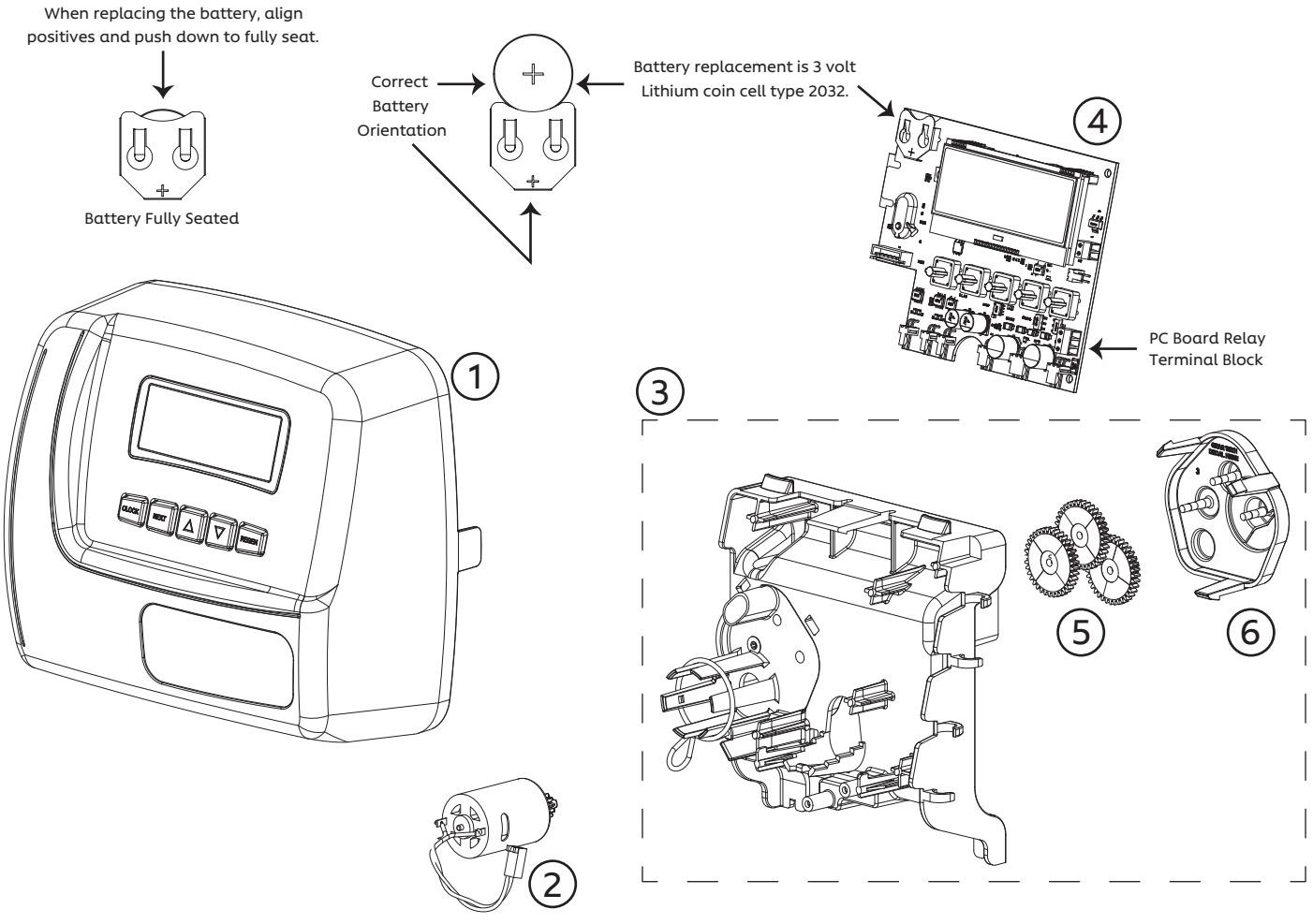

Valve Body Piston Seal Parts Diagram

Drawing No.	Order No.	Description	Quantity
1	V3430-01	CD 1.25 SPACER STACK ASSEMBLY	1
2	V3004	DRIVE CAP ASSEMBLY	1
3	V3946	CD WIDE DRIVE BACK PLATE	1
4a	V3407	CD 1.25 PISTON DOWNFLOW ASSEMBLY	1
5	V3174	CD REGERANT PISTON	1
6	V3135	O-RING 228	1
7	V3180	O-RING 337	1
8	V3358	O-RING 215 (DISTRIBUTOR TUBE) 1.25	1
Not Shown	V3020	CD 1.25 BODY ASSEMBLY DOWNFLOW	1

Note: The regenerant piston is not used in backwash only applications.

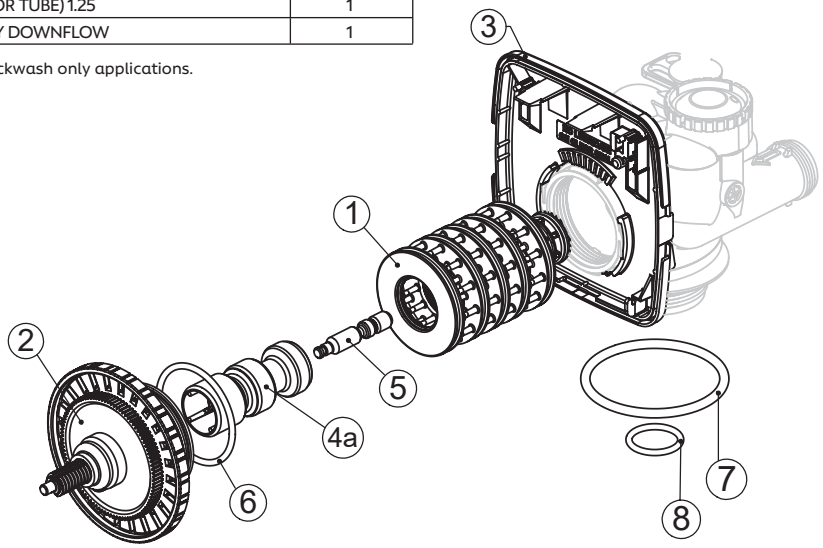

Injector Cap, Injector Screen, Injector, Plug, and 0-Ring

Drawing No.	Order No.	Description	Quantity
1	V3176	INJECTOR CAP	1
2	V3152	O-RING 135	1
3	V3177-01	INJECTOR SCREEN CAGE	1
4	V3010-1Z	INJECTOR ASSY Z PLUG (2 REQUIRED)	1
Not Shown	V3170	O-RING 011	*
Not Shown	V3171	O-RING 013	*

The injector plug and the injector each contain one 011 (lower) and one 013 (upper) o-ring.

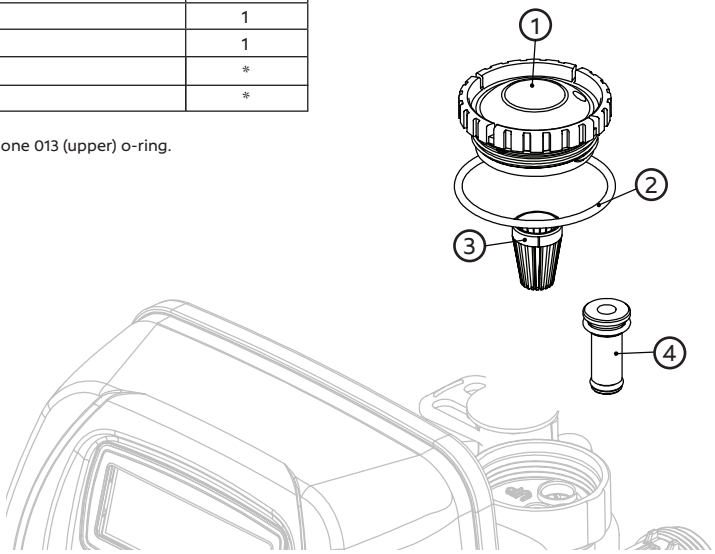

Installer Display Settings

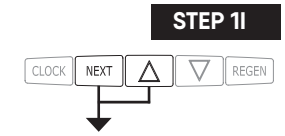

STEP 1I - Press NEXT and ▲ simultaneously for 3 seconds.

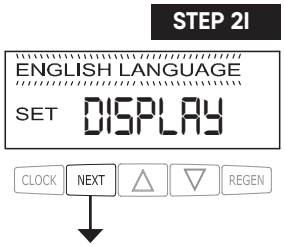

STEP 2I – **Display Language:** Choose between English and Spanish. Press NEXT to go to Step 3I. Press REGEN to exit Installer Display Settings.

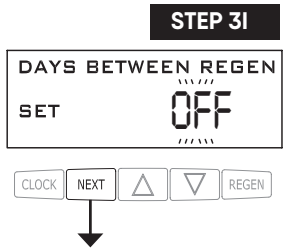

STEP 3I – **Day Override:** When volume capacity is set to "OFF", sets the number of days between regenerations is set. When volume capacity is set to AUTO or to a number, sets the maximum number of days between regenerations. If value set to "OFF", regeneration initiation is based solely on volume used. If value is set as a number (allowable range from 1 to 28), a regeneration initiation will be called for on that day even if sufficient volume of water were not used to call for a regeneration. Set Day Override using ▼ or ▲:

- Number of days between regeneration (1 to 28); or
- "OFF".

Press NEXT to go to step 5I. Press REGEN to return to previous step.

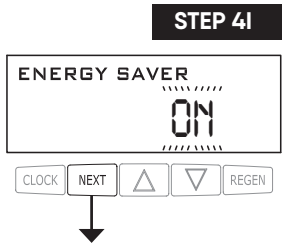

STEP 4I – As an energy-saving feature, the control will automatically turn off the display illumination after five minutes of keypad inactivity. Any further keypad activity or water use will re-illuminate the display for 5 minutes. The Energy Saver feature default is ON. Press NEXT to exit Installer Display Settings. Press REGEN to return to previous step.

RETURN TO NORMAL MODE

User Display Settings

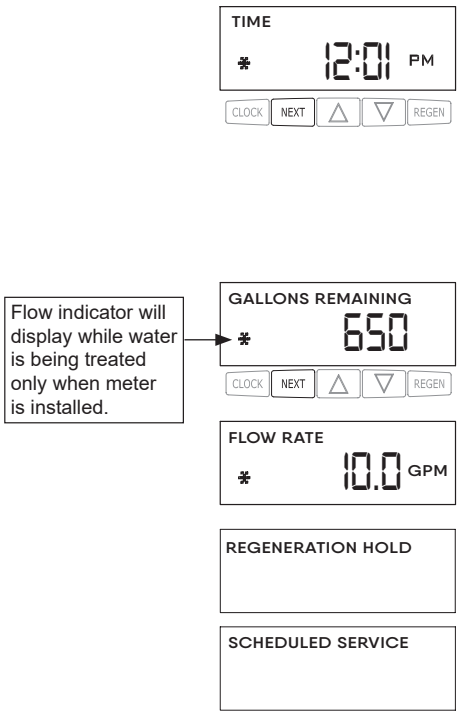

General Operation

When the system is operating, one of several displays may be shown. The displays normally rotate, however pressing NEXT will pause on the selected display for 5 minutes. Pressing NEXT will alternate between the displays. One of the displays is always the current time of day. 'Days Remaining' is the number of days left before the system goes through a regeneration cycle. 'Gallons Remaining' is the gallons that will be treated before the system goes through a regeneration cycle. Pressing ▼ while in the 'Gallons Remaining' display will decrease the capacity remaining in 10-gallon increments and will also increase the volume used impacting the recorded values. Another display shows the current treated water flow rate through the system. Either REGENERATION DP or REGENERATION HOLD will be displayed if the DP switch is closed. To clear the service call reminder, press ▼ or ▲ simultaneously while the number and banner text screen is displayed.

If the system has called for a regeneration that will occur at the preset time of regeneration, the words REGEN TODAY will alternate with the header on the display.
If a water meter is installed, the flow indicator flashes on the display when water is being treated (i.e. water is flowing through the system).

Manual Regeneration

Sometimes there is a need to regenerate the system sooner than when the system calls for it, usually referred to as manual regeneration. There may be a period of heavy water usage because of guests or a heavy laundry day.

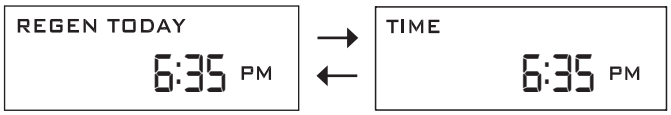

To initiate a manual regeneration at the preset delayed regeneration time, when the regeneration time option is set to DELAYED REGENERATION or DELAY + IMMEDIATE REGENERATION, press and release REGEN. The words REGEN TODAY will periodically be shown on the display to indicate that the system will regenerate at the preset delayed regeneration time. If you pressed the REGEN button in error, pressing the button again will cancel the request. Note: If the regeneration time option is set to IMMEDIATE REGENERATION there is no set delayed regeneration time so REGEN TODAY will not activate if REGEN is pressed.

To initiate a manual regeneration immediately, press and hold the REGEN button for three seconds. The system will begin to regenerate immediately. The request cannot be canceled.

User Display Settings, continued

Set Time of Day
The user can also set the time of day. Time of day should only need to be set if the battery has been depleted because of extended power outages or when daylight saving time begins or ends. If an extended power outage occurs, the time of day will flash on and off which indicates the time of day should be reset. The non-rechargeable battery should also be replaced. Control valve settings are not effected by battery depletion - only time of day.



STEP 1U – Press CLOCK.

STEP 2U - **Current Time (hour):** Set the hour of the day using ▼ or ▲. AM/PM toggles after 12. Press NEXT or CLOCK to go to Step 3U.

STEP 3U - **Current Time (minutes):** Set the minutes of the day using ▼ or ▲. Press NEXT to exit Set Time of Day. Press REGEN to return to previous step.

Power Loss
If the power goes out, the system will keep time until the battery is depleted. If an extended power outage occurs, the time of day will flash on and off which indicates the time of day should be reset and the non-rechargeable battery replaced. The system will remember the rest.



Error Message
If the word "ERROR" and a number are displayed, contact your local Water Treatment Professional for help. This indicates that the valve was not able to function properly. If the number and banner text in the contact screens has been edited, the two displays below will alternate.

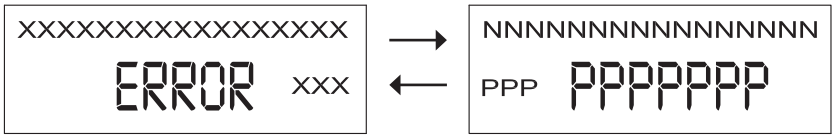

ChargerPro™ *Series*

Thoroughbred - 1.25" Series

Light Commercial Water Filtering Systems

Filtering Model	Model #	Cubic Ft Media	Mineral Tank	SVC (Service) Flow Rate	Backwash Rate
	**1" Standard Distributor**				
	CDF-1054-125	1.5 cu ft	10 x 54	5 gpm	5.3 gpm
	CDF-1252-125	2 cu ft	12 x 52	7 gpm	6.5 gpm
	CDF-1354-125	2.5 cu ft	13 x 54	9 gpm	9 gpm
	CDF-1465-125	3 cu ft	14 x 65	10 gpm	13 gpm
	CDF-1665-125	4 cu ft	16 x 65	12 gpm	15 gpm
	CDF-1865-125	5 cu ft	18 x 65	18 gpm	20 gpm
	CDF-2162-125	7 cu ft	21 x 62	24 gpm	25 gpm
	CD Valve 				

MINERAL TANK AVAILABLE COLORS:
Black, Natural, Almond, Blue, Platinum

Mineral tank jackets are available upon request.

Optional outdoor weather covers.
Optional dome hole tanks available for 10", 12", and 13" tanks only.

Sizing is approximate and can change depending on water usage.
Larger systems are available for commercial

Typical medias used in the ChargerPro Thoroughbred filter systems:

Anthracite, Birm®, Calcite, Corosex®, Carbon, Filter-Ox™, Filter-Ag®/Filter-Ag Plus®, GreensandPlus™, Katalox Light®, KDF®, & NextSand™.

Other medias are available depending your application. Contact your water treatment professional for more information.

ChargerPro Thoroughbred Valve Benefits

- Backlit screen for easy troubleshooting
  - Blue=Normal, Yellow=Programming Mode or Salt Alarm, Red=Major Error
- Allows for downflow
- Displays are in English or Spanish
- Up to three relay options
- Ability to add Dealer names and contact information on screen
- Battery time back up (keeps clock accurate in power outage)
- Learn one set of programming: one board is used for 1", 1.25", 1.5"

ChargerPro Thoroughbred - 1.25" Series Valve Specifications

Inlet/Outlet (1) ..... 3/4" to 1.5" Adapters
Cycles ..... up to 5
Valve Material ..... Fiber Reinforced Composite

Operating Pressures
Minimum/Maximum ..... 20 psi - 125 psi

Operating Temperatures
Minimum/Maximum ..... 40° - 110°F

Notes

Notes

Limited Warranty

Charger Water hereby warrants, to the original purchaser of its water treatment equipment*, that the control valve is free of defects in materials or workmanship for a period of 60 months for "Clack" controls. Owner shall promptly report to the Installing Retail Company or Charger Water Treatment Products, 8150 N. Lehigh Ave, Morton Grove, IL, any defect in material or workmanship and Charger Water shall, at Charger Water's option, repair or replace the part or parts involved if returned to Charger Water with transportation or freight charges prepaid. No factory labor will be charged for repairing or replacing defective parts during the limited warranty. This warranty shall not apply to any part that has been damaged by improper installation or maintenance, any modification from original design or manufacture, subjected to temperatures below 32°F, above 120°F, operated in water pressure that exceed 120 psi, any water line vacuum, or damaged by any circumstance beyond our control. This warranty excludes all consumables including media.

Subject to all conditions and limitations set above, at the site of original installation; any residential mineral tank proved defective in material or workmanship will be warranted for a period of 10 years.

**All other and/or fittings, mineral tank internal components shall be warranted to be free of defects in material and workmanship for a period of one year subject to conditions and limitations set forth above.*

This warranty sets forth Charger Water's sole obligation and purchaser's exclusive remedy for defective product. Charger Water shall not be liable for consequential, incidental, or contingent damages whatsoever.

The forgoing warranties are exclusive and in lieu of all other expressed or implied warranties, including, but not limited to, the implied warranties or merchantability and fitness for a particular purpose, shall not extend beyond the duration or the applicable expressed warranties provided herein.

This warranty gives you specific legal rights. You have implied warranty rights. In the event of a problem with warranty service or performance, you may be able to go to small claims court, a state court, or a federal court.

CHARGER
Water Treatment Products